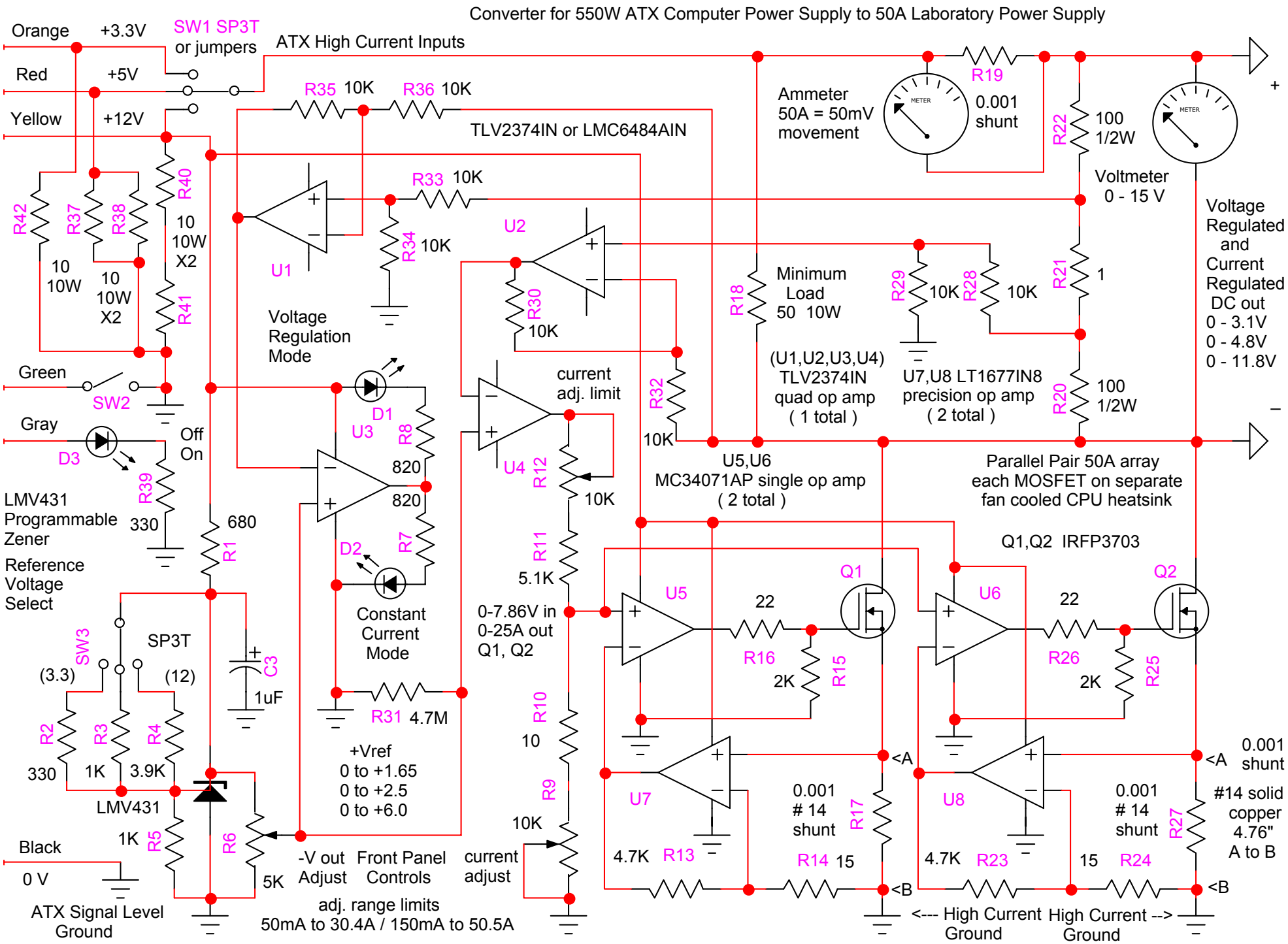
Converter for 550W ATX Computer Power Supply to 50A Laboratory Power Supply
Orange
+3.3V
SW1 SP3T
or jumpers
ATX High Current Inputs
Red
+5V
Yellow
+12V
R35 10K
R36 10K
TLV2374IN or LMC6484AIN
R19
0.001
shunt
Ammeter
50A = 50mV
movement
R22
100
1/2W
Voltmeter
0 - 15 V
Voltage
Regulated
and
Current
Regulated
DC out
0 - 3.1V
0 - 4.8V
0 - 11.8V
R42
R37
R38
R40
10
10W
X2
10
10W
10
10W
X2
R41
U1
R33 10K
R34 10K
U2
R30
10K
Voltage
Regulation
Mode
R18
Minimum
Load
50 10W
R29
10K
R28
10K
R21
1
(U1,U2,U3,U4)
TLV2374IN
quad op amp
(1 total)
U7,U8 LT1677IN8
precision op amp
(2 total)
R20
100
1/2W
Green
SW2
Gray
D3
Off
On
D1
U3
R8
820
820
R7
D2
current
adj. limit
R32
10K
U4
R12
10K
U5,U6
MC34071AP single op amp
(2 total)
Parallel Pair 50A array
each MOSFET on separate
fan cooled CPU heatsink
LMV431
Programmable
Zener
Reference
Voltage
Select
R39
330
680
R1
Constant
Current
Mode
R11
5.1K
0-7.86V in
0-25A out
Q1, Q2
Q1,Q2 IRFP3703
Q1
Q2
U5
U6
22
22
R16
2K
R15
R26
2K
R25
SW3
SP3T
(3.3)
(12)
C3
1uF
R31 4.7M
R10
10
R9
10K
R2
R3
R4
330
1K
3.9K
LMV431
+Vref
0 to +1.65
0 to +2.5
0 to +6.0
U7
U8
<A
<A
0.001
shunt
0.001
14
shunt
R17
0.001
14
shunt
R27
#14 solid
copper
4.76"
A to B
Black
0 V
1K
R5
R6
5K
4.7K
R13
R14 15
4.7K
R23
15
R24
<B
<B
-V out
Adjust
Front Panel
Controls
current
adjust
ATX Signal Level
Ground
adj. range limits
50mA to 30.4A / 150mA to 50.5A
<--- High Current
Ground
High Current -->
Ground